CALAIS TOWN HALL REPORT
February 25, 2013

Architectural Description

The Calais Town Hall is a two-story wood frame Late Greek Revival Style building that was constructed in 1866. It is listed on the National Register of Historic Places as a contributing structure in the Kents Corner Historic District. The one-by-three bay rectangular gable-front building is highlighted by a two-stage, square steeple that sits at the edge of the front (north) raking eaves. The hip-roofed second stage is louvered and capped with a tall, narrow spire. A 1 1/2 story gable-roofed stair tower addition projects from the rear (south) of the original building. The main block and steeple of the clapboarded building is roofed with corrugated metal roofing. The front porch and stair tower roofs appeared to be covered with wood shingles. Trim pieces include fairly wide overhanging eaves, cornice returns, two-part frieze, peaked lintels above the ground level windows, corner boards and a water table. A historic brick chimney sits just west of the ridge at the south end of the main block. The current foundation is made of concrete block.

The building's one-bay-wide front elevation features a wide, centered entry with double-leafed, paneled doors. The opening is covered by a pedimented porch that is supported at its exterior corners by square, boxed posts. The front porch deck is supported by metal round columns.

The eave elevations are defined by three window bays on each level. The upper window bays are filled with large 20-over-20 sash windows. The lower windows are twelve-over-twelve sash windows. All the windows are fitted with shutters, which are closed over the upper sash at the upper level windows. The historic, wide paneled entry door in the northeast corner of the lower level is now covered with a contemporary, stylized door hood. When constructed, the stair tower addition covered one of two ground level rear windows. The covered window was removed and relocated to the rear wall of the stair tower.

Site and Building Assessment and Findings

The Calais Town Hall is in good condition for its age. The main issue is drainage around the building, the proximity of very damp soils in the crawl space to the lower floor framing and the age of the existing roof. There are some life safety building codes and accessibility requirements that need to be addressed as well.

Site:
Flood Elevation and Mitigation:

The building experienced a flood in 1984 which is marked on the lower floor at about 28" above the floor level. It is understood that the Building Committee has had discussion regarding flood potential on the lower level and has been reluctant to move forward with any additional renovations without a better understanding regarding flood risk. The 1960's FEMA flood mapping (FIRMETTE) shows the building clearly in the 100 year flood zone. Based on interpolation of this map, the 100 year flood elevation would likely have been considered at somewhere between one and four feet above the lower floor. (See Below)

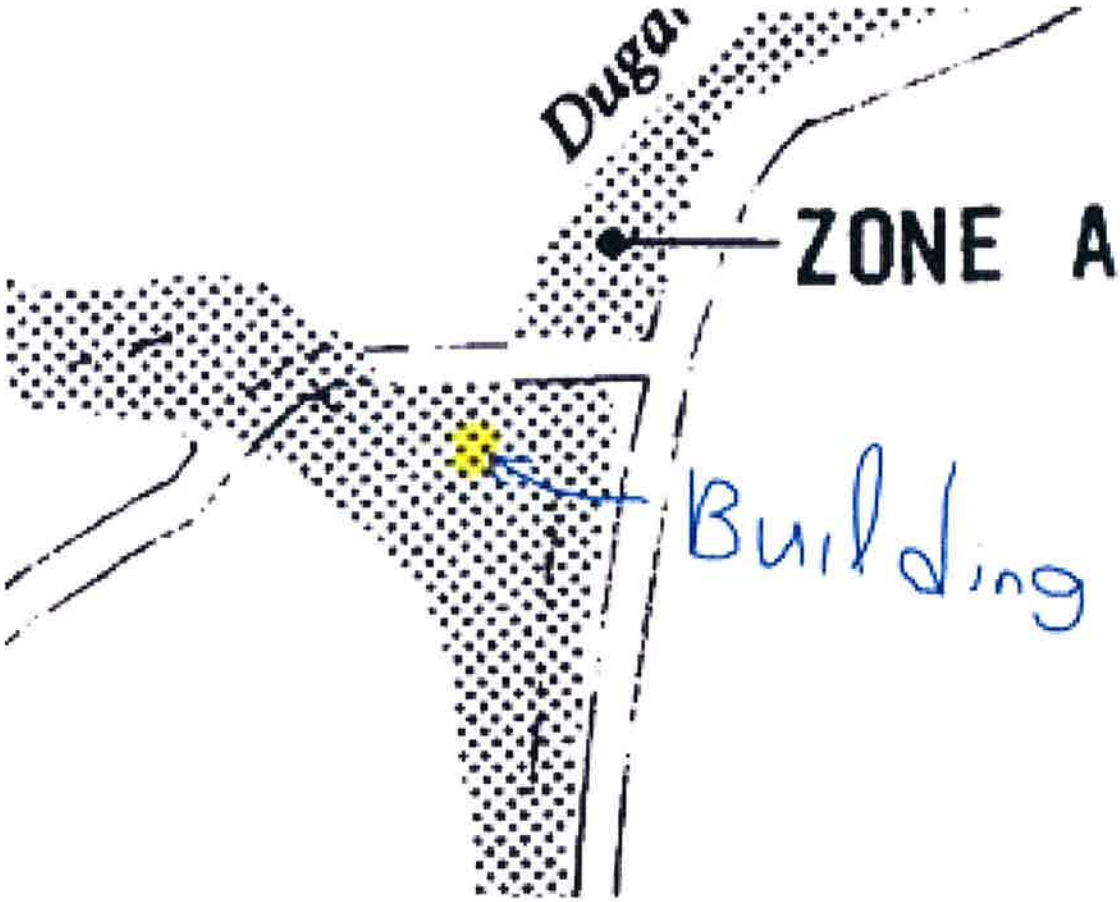

FEMA FLOOD MAP- 100 YEAR FLOOD ZONE – 1960'S NOW VOID

Recent re-mapping has been completed by FEMA (effective March 2013) which clearly shows the building outside of the 100 year flood zone. The line of the Flood Zone is in the field south of the building less than 100 yards away. The topography in this area is gently sloping indicating that the building is only moderately higher than the 100 year flood elevation.

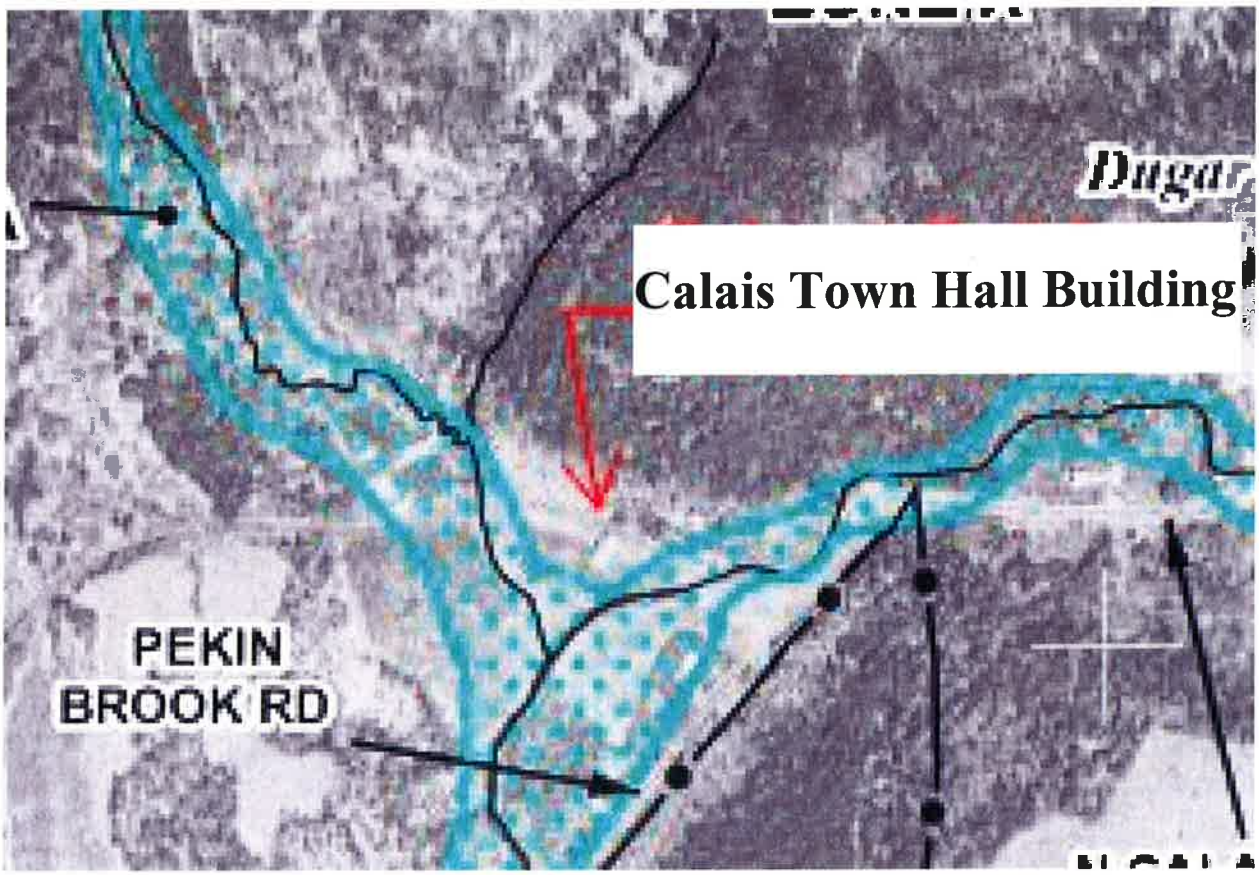

FEMA FLOOD- MAP MARCH 2013 - 100 YEAR FLOOD ZONE

Neither of the FEMA studies (1960's or current) were done in enough detail to allow a specific 100 year flood elevation to be determined. The removal of the building from the 100 year flood zone as mapped by FEMA means that Flood Mitigation Grants from the Federal Government are not possible unless there are three documented flood events. It is understood that this documentation is not available.

The change in the flood location from the earlier mapping to the current is not fully known.

However, likely factors include:

- Replacement of the culvert downstream may have been taken into account. A blocked culvert at this location would quickly cause the area to flood.
- Additional technical information- FEMA is constantly updating information on rainfall events and on the watershed.

It should be understood that there is no such thing as ***the*** flood elevation unless it is a reference to a specific flood event. FEMA mapping addresses the 100 year flood event or the flood that has a 1% chance of occurring in any one year. While the specific risk is difficult to determine in this location, it is our opinion that there is a likelihood of a flood impacting this building again within its anticipated useful life.

Dry flood proofing (keeping water out of the building in the event of a flood) of this building in its current location is not feasible due to the nature of the construction; the floors and walls are porous and not easily sealed to resist water pressure and flow.

Wet flood proofing (allowing water into the building during a flood and then allowing it to drain) could be feasible. However, this option requires using materials that are not susceptible to deterioration, rot and mold infestation which would require full replacement of finishes at the lower level as well as removal of electrical systems to above the flood level. The framing is already subject to high moisture levels and shows signs of deterioration and mold infestation.

Raising the building above a reasonable flood elevation is a feasible alternative. It makes sense to raise the building above the 1984 flood level. However, further evaluation and discussion of the risk should be completed before finalizing the specific distance. This option also solves several additional issues:

- Drainage at the north (road) side and parking lot side is poor with grade sloping towards the building. Raising the building will allow positive drainage away from the structure.
- Wood sills and siding are in contact with existing grade on the north and east sides. Raising the building will facilitate replacement of rotted sills and help preserve the replacement sills and siding.
- The road has been raised over time. The bottom of the stair leading to the upper floor is now below road level. A new stair would place it at road level.
- The proximity of the crawl space grade to the floor framing should be increased to reduce moisture content in the wood.
- Raising the building will allow for a more efficient framing repair project as there is **very** little room to work in the crawl space.
- By coordinating foundation repair/replacement with raising the building, two issues are solved at once.

Flood Proofing Recommendations:

- Raise the elevation of the building approximately two to three feet.
- Place a new concrete slab with vapor barrier in the crawl space.
- The new foundation would be designed to resist flood water infiltration into the crawl space. However, due to the structural implications of keeping the floor slab from floating, water

would be allowed to slowly migrate through the soil into the crawl space during a major flood event. After a flood event, the remaining water would then be pumped out of the space.

Septic System:

A schematic drawing of the existing septic disposal system was provided by the Building Committee (see below). The system consists of a septic tank and a dry well. This system is allowed as an existing system with intermittent use. If the building is to be considered for full time use or for events, improvements may be required.

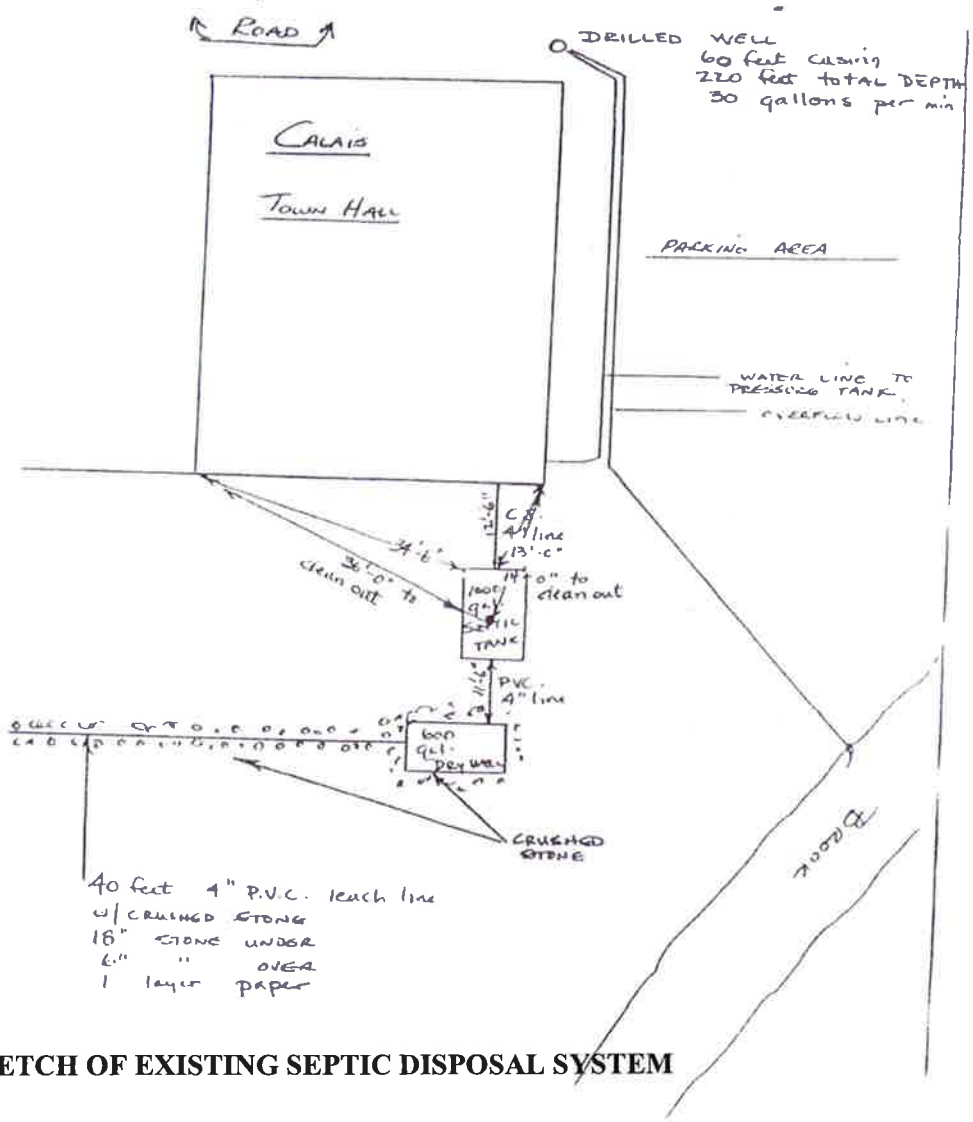

SCHEMATIC SKETCH OF EXISTING SEPTIC DISPOSAL SYSTEM

<u>Septic System Recommendations:</u>

- Provide periodic maintenance and inspection of the system including pumping out the septic tank.
- Monitor periodically and review for potential failure.
- Protect the system from damage during construction activities.

- Plan for further evaluation, replacement or use of portable toilets if more sustained use or a change of use is anticipated.

Roof:

The existing corrugated metal roof has reached the end of its useful life and needs to be replaced. The Building Committee indicated that the main roof and the steeple roofs are scheduled to be replaced. The following recommendations are based on visual observations at the time of the site visit. Where the existing main roof meets the steeple, the intersection currently has not been properly flashed. The existing corrugated metal roof/flashing sits on top of the clapboards/trim. The new roof needs to be properly flashed so water does not enter at that intersection. This will require ice and water shield and metal counterflashing with the flashing under the trim and clapboard instead of on top. Prior to the new roof being installed, a metal roof drip edge along the roof perimeter needs to be installed.

The front porch and rear stair tower roofs are covered with wood shingles. Those that were visible appeared to be in good condition.

Exterior Clapboards and Trim:

The clapboard siding and trim on the Town Hall is generally in good condition for a building of this age. The clapboard siding and trim on the stair addition is in fair condition.

At the northeast corner of the roof eave, the vertical trim board is water damaged.

At the lower entrance (northeast corner of the building), water run-off from the main roof is causing damage to the wood clapboards above entrance roof below and to the sides of the entrance.

Exterior Clapboards and Trim Recommendations:

- At the northeast corner of the roof eave, the vertical trim board that is water damaged needs to be replaced
- The existing skirtboards and approximately three-four courses of clapboard siding above the skirtboard on all sides of the Town Hall and stair addition need to be replaced.
- There are a number of rotted and damaged clapboards and trim at the stair addition that need to be replaced.
- Water damaged clapboards above and to the sides of the lower floor entrance roof need to be replaced. A roof gutter or rain diverted should be installed at the main roof to divert water from falling onto the lower floor entrance roof.
- All damaged/rotted clapboards and trim that are replaced, should be replaced in kind, matching material, the dimensions and profiles of the existing clapboards and trim pieces.
- Clapboards and trim are to be scraped of all loose paint, sanded, prepped for painting, primed, painted (one coat of primer and two coats of finish paint) and joints caulked and sealed.

Windows and Shutters:

The windows are in fair condition and a majority of the window glass is original. There are window sash parts that need to be replaced. Quite of few of the existing windows are currently not properly closed. There are gaps where the heads of the upper sash meet the head of the window frame; in some cases insulation has been placed to fill the gaps. There are no mechanisms in place for operating the windows.

According to the Building Committee, the building will not be occupied in cold weather and will remain unheated. It is not appropriate to go through the expense of installing storm windows and weather stripping the windows, since saving energy is not a factor. Installing storm windows will have negative visual impact on the historic windows.

There are a number of broken and missing window panes.

A number of existing shutters have broken and missing louver blades.

Window and Shutter Recommendations:

- The historic windows are to be retained, removed from the building and repaired in-kind, matching the dimensions and profile of the historic material. Windows are to be re-installed so that they can be closed properly.
- Windows are to be scraped of all loose paint, sanded, prepped for painting, primed and painted (one coat of primer and two coats of finish paint).
- Replace missing or broken glass panes
- Replace deteriorated and/or missing glazing bead.
- Replace missing and damaged louver blades on window shutters, which are to be replaced in-kind, matching the dimensions and profile of the historic material. Shutters are to be scraped of all loose paint, sanded, prepped for painting, primed and painted (one coat of primer and two coats of finish paint).

Front Porch and Stairs:

The current front porch and stairs do not meet code for fall protection. Due to the front porch and stair height above grade, a guard rail is required at a height of 42" above the floor of the porch. Guards are required to have intermediate rails or ornamental pattern such that a sphere 4 inches in diameter is not able to pass through any opening. A handrail is required at the stairs and needs to be located at a height of not less than 34 inches and no more than 38" above the surface of the tread. Due to the width of the existing stairs, an intermediate handrail is required at the center of the stair for the entire run of the stair.

Front Porch and Stair Recommendations:

- At the existing Front Porch, remove the existing wood railings and provide and install a new wood guard rail at a height of 42" above the porch deck and intermediate rails or ornamental pattern such that a sphere 4 inches in diameter is not able to pass through any opening.
- At the existing stair, remove the existing wood railings and provide and install a new wood guard rail at a height of 42" above the stair tread and intermediate rails or ornamental pattern such that a sphere 4 inches in diameter is not able to pass through any opening. Provide and install a new wood handrail at the stairs, located at a height of not less than 34 inches and no more than 38" above the surface of the tread. Provide and install a new intermediate railing at the center of the stair.
- If the recommendation to raise the building 2'-3' is accepted, then the existing stair will need to be removed and replaced. A new wood stair framing system will be installed with three concrete sono tubes for the end of the stairs to sit on. New treads to be a minimum of 11" deep and risers to be a maximum of 7" high. New railings and guards will need to be installed at the same dimensional requirements as required for the exiting stair.

Lower Floor Accessible Entrance:
The lower floor accessible entrance does not meet accessibility requirements. On a front approach to a door, 18" clear is required parallel to the door, beyond the latch side, There currently is approximately 4". The door swing cannot be changed to swing into the building, since the lower floor has a capacity of more than 50 occupants. When there are more than 50 occupants in a space, all doors are required to swing in the direction of egress.

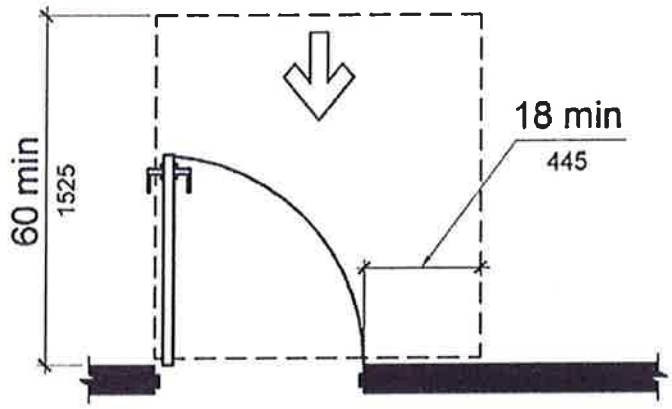

(a)
front approach, pull side

Lower Floor Accessible Entrance Recommendations:

- The existing "bridge" needs to be made wider to accommodate the additional 18" clearance for a requirement for a depth of 60"
- If the recommendation to raise the building 2'-3' is accepted and the lift is relocated then stairs and railings would be installed at this location. If the recommendation to raise the building 2'-3' is accepted and the lift is not relocated, then this area of the parking lot would be re-graded so that this entrance is accessible without a "bridge."

Interior:
Floor Plans, Accessibility:
The lower and upper floor plans are original except for a rear stair addition and an interior chair lift and enclosure that have been added at the front of the building. The existing chair lift does not meet current accessibility codes.

Since the chair lift needs to be replaced, a second option would be to relocate it to a more appropriate location. A more appropriated location would be adjacent to the existing stair addition.

At the lower floor, the existing bathroom at the lower floor plan does not meet accessibility requirements. The existing door swings into the space and into the clear floor space of the toilet and sink which is not allowed.

Floor Plans, Accessibility Recommendations:

- The existing chair lift needs to be removed along with all associated wiring, controls, supports, door frames and locksets at existing doors. The existing doors can be salvaged for reuse. A new chair lift, wiring, associated controls, supports, door frames, locksets and electric strikes need to be installed. The existing salvaged doors will be reinstalled.
- A new addition off the existing stair addition could be constructed to accommodate a new code complaint chair lift. This would allow for the lower and upper floors to be returned to their original historic appearance.
- At the existing lower floor bathroom, change the swing of the existing door swing so that the door swings out instead of in.

Life Safety Building Code:

The Town Hall is considered an Assembly Use since it has a capacity of over 50 occupants per code. Assembly Use requires a fire alarm system with manual pull stations at all exits and a dialer (which requires an active phone line) to a monitoring station.

At the lower and upper floors there are existing exit lights and emergency egress lights. The existing exit lights were not illuminated. The existing emergency egress lights were not operating and their batteries may have to be replaced.

At the lower floor, the existing exterior door of the rear stair addition has a step down to grade of approximately 19."

At the existing stair at the rear addition, the existing railing that is located on the center wall of the existing stair is required to be continuous.

Life Safety Building Code Recommendations:

- Since this building is going to be used on a limited basis, a variance request to the Vermont Department of Fire Safety to eliminate the fire alarm system requirement should be investigated. They may consider, a couple of options, such as, the removal of the existing wood stoves, installation of new heat detectors with notification to the fire department or requiring a fire watch, which means a fireman has to be present with the ability to communicate directly with the Fire Department in case of emergency when the building is occupied.
- Confirm that the illuminated exit lights are still operable, if not, they will need to be replaced. Confirm that the batteries for the emergency egress lights will maintain a charge when power is turned on, if not then the existing batteries will need to be replaced.
- At the existing rear stair, remove the existing handrail at the center wall and install a new 1 1/2" diameter hardwood handrail that is continuous from the upper floor landing to the lower landing.
- At the existing exterior door at the rear stair addition. The height of the step cannot be greater than 7." In order for the addition to be a means of egress, three steps need to be installed including a railing on both sides.

Roof Framing:

The roof framing was observed to be generally in good condition with a few notable exceptions. The roof is supported on two King Post trusses and a Queen Post truss at the steeple. Rafters are supported at intermediate 7" x 7" purlins running between the trusses.

The rafters and purlins appear straight and in good condition. The rafters appear to meet current code requirements while the purlins appear to be below code requirements.

The gable trusses are in good condition without movement, significant deflection or noticeable stress at the connections. No detailed analysis has been made of the trusses.

TYPICAL ROOF FRAMING- RAFTERS AND PURLINS

The Queen Post truss at the steeple shows signs of deflection with some splitting of the top chord at the purlin connection. (see photo at right). The leaning of the steeple observable from the outside is an indicator that there has been deflection of this truss. The configuration of a Queen Post truss (without a diagonal member at the center portion) is not as stiff as the King Post trusses and allows the bottom chord to develop very high stresses.

PURLIN TO QUEEN POST TRUSS CONNECTION- SPLIT IN TOP CHORD

A small section of rotted framing was noted at the south side near the chimney.

Roof Framing Recommendations:

- The Queen Post roof truss should be evaluated in further detail and improvements made to repair damaged members and stiffen the truss.
- The rotted section of framing at the south near the chimney should be replaced or repaired.

Second Floor Framing:

First Floor Posts Supporting Second Floor

Second Floor Framing Access Hole

A portion of the second floor framing was observable by removing sections of floor boards. The floor joists are 3" x 9" timbers at 24" spacing. The beams were not observed, but appear to be supported on the system of posts observed at the first floor. The required loading for this area is 60 psf for "fixed seating assembly."

The floor appears to be in good serviceable condition without noticeable deflection and is not overly "bouncy" when walked on. The current code requirements require a 60 PSF live load for "Assembly with Fixed Seating".

The floor joists meet the current code requirements. The beams were not observed, but a standard 8" x 9" beam would be about 10% below current code requirements.

Second Floor Framing Recommendations:

- The floor appears to be in good, serviceable condition. Second floor use should not be altered; fixed seating should remain and tightly packed crowds should be avoided in the aisles and open areas.
- The front entry and stair framing should be reinforced or replaced. The framing is very lightly framed and has limited capacity.

Entry and Stair Framing

First Floor Framing and Foundation:

The first floor framing is constructed over a very shallow crawl space. The area is used for meetings and would be classified under assembly use and would require a 100 PSF Live Load under current code requirements. The beams are 9" x 9" timbers and joists are half logs of about 8" diameter. The foundation is concrete masonry units (CMU). Where the existing joists are in good condition, they would meet current codes for loading requirements. The beams would be at about 50% of the required 100 psf live load.

Rotted and Moldy Beams

The proximity of the very damp soil conditions in the crawl space to the framing has allowed the timbers to have very high moisture content. Framing for the north two bays has rotted substantially to the point that its load carrying capacity is limited and mold is present.

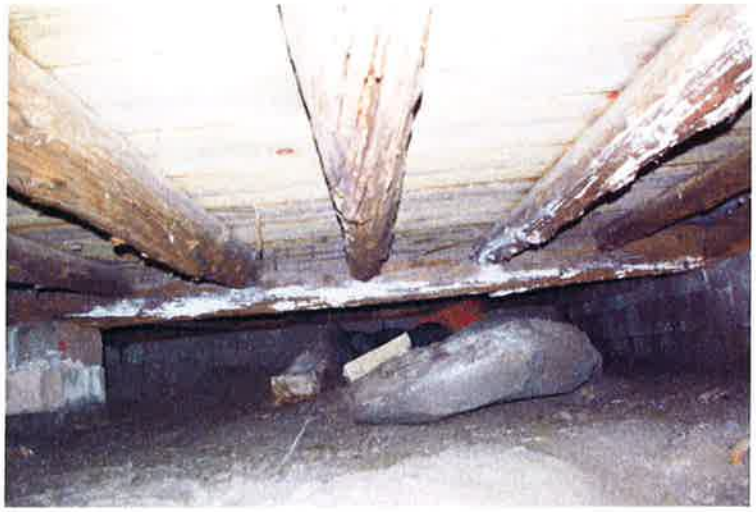

Crawl Space Below First Floor

The exterior foundation wall is in fair condition. There are areas where there is noticeable shifting and deterioration of the wall. The interior CMU masonry piers appear to be dry laid (no mortar in the joints) and are in fair condition.

CMU Masonry Foundation Wall

Timber sills were noted to have rotted especially at the north and east sides of the building where they are in contact with the ground.

Buried Sills at Parking Lot Side of Building

First Floor Framing & Foundation Recommendations:

- The rotted portion of the first floor framing must be replaced or repaired. This is currently a safety concern and the northern portion of the first floor should not be occupied by more than two or three people at a time. Temporary shoring of the rotted beams and joists should be considered.
- Exterior sills should be evaluated in detail and replaced where rotted.
- Interior piers should be reconstructed with suitable cast-in-place concrete piers or fully mortared and reinforced masonry piers with footings placed at frost depth.
- The exterior foundation wall should be further investigated by excavating along the perimeter of the building and replaced or repaired.
- A new vapor barrier and mud slab should be installed in the crawl space to minimize future moisture damage.
- All work related to first floor framing and foundation should be coordinated with flood mitigation efforts.

Structural Floor Plans, Accessibility:

A new addition off the existing stair addition to accommodate a new code complaint chair lift would allow for the lower and upper floors to be returned to their original historic appearance.

Structural Floor Plans, Accessibility Recommendations:

- An addition could be constructed for the new chair lift to the south of the existing rear stair addition. Conceptual construction description as follows:
- Cast-in-place concrete foundation with 8" reinforced frost walls with 24"x 10" concrete footings down to five feet of frost depth. A new 4" slab on grade with vapor barrier.
- Exterior walls to be constructed of 2" x 6" framing at 16" with 1/2" plywood wall sheathing at the exterior.
- Floor framing to be 2" x 8" at 16" on center with 3/4" plywood floor sheathing.
- Roof framing to be pre-fabricated roof trusses at 24" on center with 3/4" plywood roof sheathing.
- Each floor level to be tied to the existing building with lag screws at 16" spacing.

Priorities:

1. **Life Safety Building Code and Floor Plans, Accessibility Recommendations;**
   Life Safety Building Code Recommendations:
   - Since this building is going to be used on a limited basis, a variance request to the Vermont Department of Fire Safety to eliminate the fire alarm system requirement should be investigated. They may consider, a couple of options, such as, the removal of the existing wood stoves, installation of new heat detectors with notification to the fire department or requiring a fire watch, which means a fireman has to be present with the ability to communicate directly with the Fire Department in case of emergency when the building is occupied.
   - Confirm that the illuminated exit lights are still operable, if not, they will need to be replaced. Confirm that the batteries for the emergency egress lights will maintain a charge when power is turned on, if not then the existing batteries will need to be replaced.
   - At the existing exterior door at the rear stair addition. The height of the step cannot be greater than 7." In order for the addition to be a means of egress, three steps need to be installed including a railing on both sides.

   Floor Plans, Accessibility Recommendations:
   - At the existing lower floor bathroom, change the swing of the existing door swing so that the door swings out instead of in.

2. **Lower Floor Accessible Entrance Recommendations:**
   - The existing "bridge" needs to be made wider to accommodate the additional 18" clearance for a required depth of 60"

3. **Flood Proofing, Septic System, First Floor Framing and Foundation, Front Porch and Stair and Lower Floor Accessible Entrance Recommendations**
   Flood Proofing Recommendations
   Septic System Recommendations

First Floor Framing & Foundation Recommendations
Front Porch and Stair Recommendations:

- At the existing Front Porch, remove the existing wood railings and provide and install a new wood guard rail at a height of 42" above the porch deck and intermediate rails or ornamental pattern such that a sphere 4 inches in diameter is not able to pass through any opening.
- If the recommendation to raise the building 2'-3' is accepted, then the existing stair will need to be removed and replaced. A new wood stair framing system will be installed with three concrete sono tubes for the end of the stairs to sit on. New treads to be a minimum of 11" deep and risers to be a maximum of 7" high. New railings and guards will need to be installed at the same dimensional requirements as required for the exiting stair.

Lower Floor Accessible Entrance Recommendations:

- If the recommendation to raise the building 2'-3' is accepted and the lift is relocated then stair and railings would be installed at this location. If the recommendation to raise the building 2'-3' is accepted and the lift is not relocated, then this area of the parking lot would be re-graded so that this entrance is accessible without a "bridge."

4. **Floor Plans, Accessibility Recommendations:**
   - The existing chair lift needs to be removed along with all associated wiring, controls, supports, door frames and locksets at existing doors. The existing doors can be salvaged for reuse. A new chair lift, wiring, associated controls, supports, door frames, locksets and electric strikes need to be installed. The existing salvaged doors will be reinstalled.

5. **Front Porch and Stair Recommendations:**
   - At the existing Front Porch, remove the existing wood railings and provide and install a new wood guard rail at a height of 42" above the porch deck and intermediate rails or ornamental pattern such that a sphere 4 inches in diameter is not able to pass through any opening.
   - At the existing stair, remove the existing wood railings and provide and install a new wood guard rail at a height of 42" above the porch deck and intermediate rails or ornamental pattern such that a sphere 4 inches in diameter is not able to pass through any opening. Provide and install a new wood handrail at the stairs, located at a height of not less than 34 inches and no more than 38" above the surface of the tread. Provide and install a new intermediate railing at the center of the stair.

6. **Exterior Clapboards and Trim and Roof Framing Recommendations:**

   Exterior Clapboards and Trim and Roof Framing Recommendations:
   - At the northeast corner of the roof eave, the vertical trim board that is water damaged needs to be replaced
   - The existing skirtboards and approximately three-four courses of clapboard siding above the skirtboard on all sides of the Town Hall and stair addition need to be replaced.

- There are a number of rotted and damaged clapboards and trim at the stair addition that need to be replaced.
- Water damaged clapboards above and to the sides of the lower floor entrance roof need to be replaced. A roof gutter or rain diverted should be installed at the main roof to divert water from falling onto the lower floor entrance roof.
- All damaged/rotted clapboards and trim that are replaced, should be replaced in kind, matching material, the dimensions and profiles of the existing clapboards and trim pieces.
- Clapboards and trim are to be scraped of all loose paint, sanded, prepped for painting, primed, painted (one coat of primer and two coats of finish paint) and joints caulked and sealed.

Roof Framing Recommendations:

- The Queen Post roof truss should be evaluated in further detail and improvements made to repair damaged members and stiffen the truss.
- The rotted section of framing at the south near the chimney should be replaced or repaired.

7. **Window and Shutter Recommendations:**
   - The historic windows are to be retained, removed from the building and repaired in-kind, matching the dimensions and profile of the historic material. Windows are to be re-installed so that they can be closed properly.
   - Windows are to be scraped of all loose paint, sanded, prepped for painting, primed and painted (one coat of primer and two coats of finish paint).
   - Replace missing or broken glass panes
   - Replace deteriorated and/or missing glazing bead.
   - Replace missing and damaged louvers blades on window shutters, which are to be replaced in-kind, matching the dimensions and profile of the historic material. Shutters are to be scraped of all loose paint, sanded, prepped for painting, primed and painted (one coat of primer and two coats of finish paint).

8. **Life Safety Building Code Recommendations:**
   - At the existing rear stair, remove the existing handrail at the center wall and install a new 1 1/2" diameter hardwood handrail that is continuous from the upper floor landing to the lower landing.

9. **Floor Plans, Accessibility Recommendations:**

   Floor Plans, Accessibility Recommendations:
   - A new addition off the existing stair addition could be constructed to accommodate a new code complaint chair lift. This would allow for the lower and upper floors to be returned to their original historic appearance.

   Structural Floor Plans, Accessibility Recommendations:
   - An addition could be constructed for a new chair lift to the south of the existing rear stair addition. Conceptual construction description as follows:

- Cast-in-place concrete foundation with 8" reinforced frost walls with 24"x 10" concrete footings down to five feet of frost depth. A new 4" slab on grade with vapor barrier.
- Exterior walls to be constructed of 2" x 6" framing at 16" with 1/2" plywood wall sheathing at the exterior.
- Floor framing to be 2" x 8" at 16" on center with 3/4" plywood floor sheathing.
- Roof framing to be pre-fabricated roof trusses at 24" on center with 3/4" plywood roof sheathing.
- Each floor level to be tied to the existing building with lag screws at 16" spacing.